ELKAY SPECIFICATIONS

Lustertone® Classic Stainless Steel 23-1/2" x 18-1/4" x 7-1/2" Single Bowl Undermount Sink with Perfect Drain®

Model(s) ELUH2115PD

PRODUCT SPECIFICATIONS

Lustertone® Classic Stainless Steel, 23-1/2" x 18-1/4" x 7-1/2" Single Bowl Undermount Sink with Perfect Drain®. Sink is manufactured from 18 gauge 304 Stainless Steel with a Lustrous Satin finish, Rear Center drain placement, and Sides and Bottom pads.

Included with Product: **One LKPD1 Perfect Drain and strainer.**

A Century of Tradition and Quality.
For more than 100 years, Elkay has been making innovative products and providing exceptional customer care. We take pride in offering plumbing products that make life easier, inspire change and leave the world a better place.

Product Compliance: ASME A112.19.3/CSA B45.4
Accessory: ASME A112.18.2/CSA B125.2

Sinks are listed by IAPMO® as meeting the applicable requirements of the Uniform Plumbing Code®, International Plumbing Code®, and National Plumbing Code of Canada.

Clean and Care Manual (PDF)
Installation Instructions (PDF) - 1000005239
Installation Instructions (PDF) - 74180289_Disposer
Installation Instructions (PDF) - 74180340-USA_Drain
Installation Instructions (PDF) - Garbage_Disposer_Compatibility_Guide
Warranty (PDF)

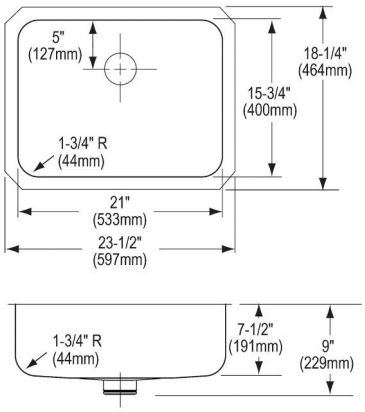

In keeping with our policy of continuing product improvement, Elkay reserves the right to change product specifications without notice. Please visit elkay.com for the most current version of Elkay product specification sheets. This specification describes an Elkay product with design, quality, and functional benefits to the user. When making a comparison of other producers' offerings, be certain these features are not overlooked. Latest version of the spec sheet available: https://www.elkayfiles.com/spec-sheets/ELUH2115PD_spec.pdf

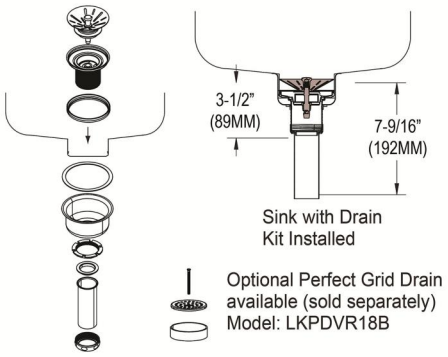

PART:_____QTY: _____

PROJECT:_____

CONTACT:_____

DATE:_____

NOTES:_____

APPROVAL:_____

In keeping with our policy of continuing product improvement, Elkay reserves the right to change product specifications without notice. Please visit elkay.com for the most current version of Elkay product specification sheets. This specification describes an Elkay product with design, quality, and functional benefits to the user. When making a comparison of other producers' offerings, be certain these features are not overlooked. Latest version of the spec sheet available: https://www.elkayfiles.com/spec-sheets/ELUH2115PD_spec.pdf

Installation Type:	Undermount
Material:	304 Stainless Steel
Special Features:	Perfect Drain
Finish:	Lustrous Satin
Gauge:	18
Sound Deadening:	Sides and Bottom pads
Number of Bowls:	1
Sink Dimensions:	23-1/2" x 18-1/4" x 9"
Bowl 1 Dimensions:	21" x 15-3/4" x 7-1/2"
Drain Size:	3-3/8" (86mm)
Drain Location:	Rear Center
Minimum Cabinet Size:	27"
Mounting Hardware:	Undermount brackets sold separately
Template Included:	Yes
Cutout Template #:	1000001400

Template is available for download at elkay.com. CAD software will be required to open the template.

Perfect Drain: Seamlessly welded stainless steel collar eliminates the gap between a traditional drain and the sink for a more sanitary and gap free installation. Select garbage disposers can be installed on either sink bowl for user convenience. Please see our Garbage Disposer Compatibility Guide.

Installation Profile:

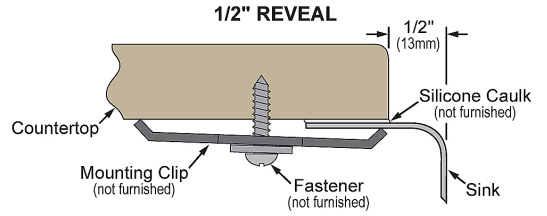

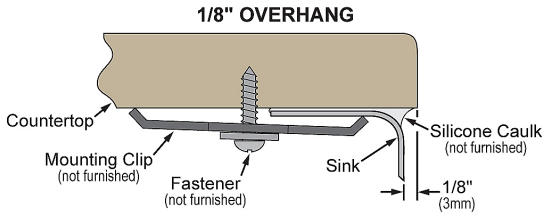

Designed to affix to the underside of any solid surface countertop.

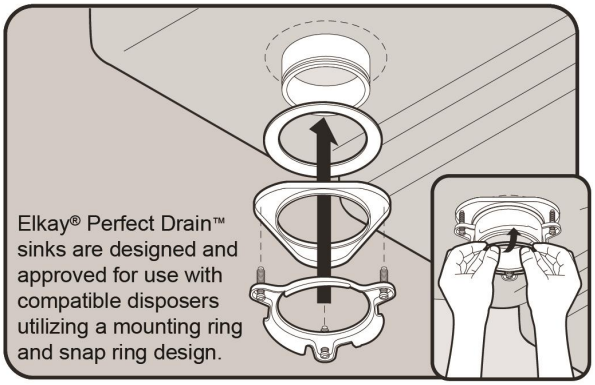

Included Accessories

In keeping with our policy of continuing product improvement, Elkay reserves the right to change product specifications without notice. Please visit elkay.com for the most current version of Elkay product specification sheets. This specification describes an Elkay product with design, quality, and functional benefits to the user. When making a comparison of other producers' offerings, be certain these features are not overlooked. Latest version of the spec sheet available: https://www.elkayfiles.com/spec-sheets/ELUH2115PD_spec.pdf

LKPD1	Perfect Drain® Fitting Type 304 Stainless Steel Body and Strainer Spec Sheet (PDF)	

Optional Accessories		
LKWOBG2115SS	Stainless Steel 20" x 14-3/4" x 1" Bottom Grid Spec Sheet (PDF)	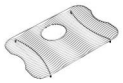
LKDS35	3-1/2" Garbage Disposal Stopper / Strainer for use with Perfect Drain®-Satin Finish Spec Sheet (PDF)	
LKDS99	3-1/2" Garbage Disposal Stopper / Strainer for use with Perfect Drain®-Chrome Polished Stainless Steel Spec Sheet (PDF)	
LKPDVR18B	Perfect Drain® Chrome Plated Brass Body Vandal-resistant Strainer Spec Sheet (PDF)	

In keeping with our policy of continuing product improvement, Elkay reserves the right to change product specifications without notice. Please visit elkay.com for the most current version of Elkay product specification sheets. This specification describes an Elkay product with design, quality, and functional benefits to the user. When making a comparison of other producers' offerings, be certain these features are not overlooked. Latest version of the spec sheet available: https://www.elkayfiles.com/spec-sheets/ELUH2115PD_spec.pdf