ELKAY SPECIFICATIONS

Quartz Classic® 33" x 22" x 10" Offset 60/40 Double Bowl Undermount Sink with Aqua Divide
Model(s) ELGHU3322R

PRODUCT SPECIFICATIONS

Quartz Classic® 33" x 22" x 10" Offset 60/40 Double Bowl Undermount Sink with Aqua Divide. Sink is molded with up to 80% natural quartz and high performance acrylic resins that are non-porous providing superior heat, scratch, fade and stain resistance. Naturally sound deadening and Rear Center drain placement.

Installation Type:	Undermount
Material:	Quartz
Special Features:	Aqua Divide
Finish:	Black (BK), Dusk Gray (GY), Graphite (GT), Greystone (GS), Matte Black (MB), Mocha (MC), White (WH)
Number of Bowls:	2
Sink Dimensions:	33" x 22" x 10"
Bowl 1 Dimensions:	17-3/16" x 19-5/16" x 10"
Bowl 2 Dimensions:	13-1/8" x 16-5/8" x 10"
Drain Size:	3-1/2" (89mm)
Drain Location:	Rear Center
Minimum Cabinet Size:	36"
Mounting Hardware:	Part # 1000003442 included
Template Included:	Yes
Cutout Template #:	1000003465

Template is available for download at elkay.com. CAD software will be required to open the template.

Dusk Gray (GY) | Graphite (GT) | Greystone (GS) | Matte Black (MB) | Mocha (MC)

White (WH)

A Century of Tradition and Quality.
For more than 100 years, Elkay has been making innovative products and providing exceptional customer care. We take pride in offering plumbing products that make life easier, inspire change and leave the world a better place.

KBB READERS' CHOICE AWARDS 2025 WINNER

Product Compliance: CSA B45.8/IAPMO Z403

Sinks are listed by IAPMO® as meeting the applicable requirements of the Uniform Plumbing Code®, International Plumbing Code®, and National Plumbing Code of Canada.

Clean and Care Manual (PDF)
Installation Instructions (PDF) - 1000005238
Warranty (PDF)

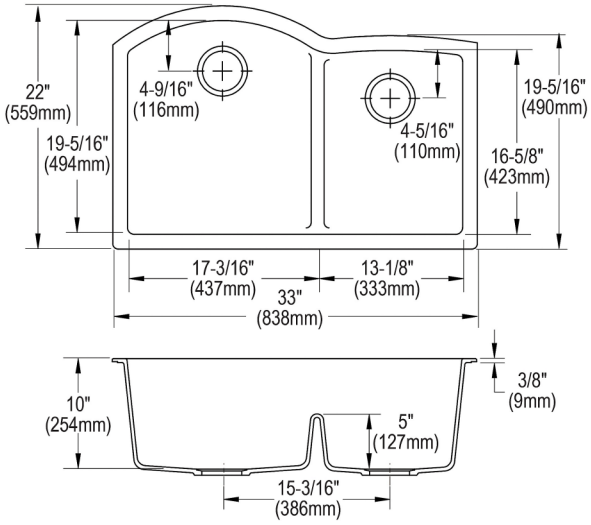

PART:_____QTY: _____

PROJECT:_____

CONTACT:_____

DATE:_____

NOTES:_____

APPROVAL:_____

In keeping with our policy of continuing product improvement, Elkay reserves the right to change product specifications without notice. Please visit elkay.com for the most current version of Elkay product specification sheets. This specification describes an Elkay product with design, quality, and functional benefits to the user. When making a comparison of other producers' offerings, be certain these features are not overlooked. Latest version of the spec sheet available: https://www.elkayfiles.com/spec-sheets/ELGHU3322R_spec.pdf

Installation Profile:

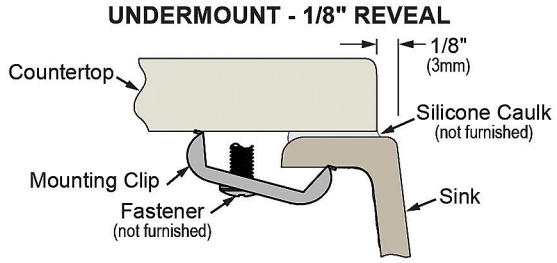

Designed to affix to the underside of any solid surface countertop.

Optional Accessories		
LK99	Deluxe 3-1/2" Drain Type 304 Stainless Steel Body Strainer Basket Rubber Seal and Tailpiece Spec Sheet (PDF)	
LKQD35	Polymer 3-1/2" Disposer Flange with Removable Basket Strainer and Rubber Stopper Spec Sheet (PDF)	
LKQS35	Polymer 3-1/2" Drain Fitting with Removable Basket Strainer and Rubber Stopper Spec Sheet (PDF)	
LKEC2031	Explore™ Single Hole Kitchen Faucet with Pull-down Spray and Forward Only Lever Handle Spec Sheet (PDF)	
LK6000	Everyday Single Hole Deck Mount Kitchen Faucet with Pull-down Spray Forward Only Lever Handle Spec Sheet (PDF)	

LKQD35	Polymer 3-1/2" Disposer Flange with Removable Basket Strainer and Rubber Stopper Spec Sheet (PDF)	
LKQS35	Polymer 3-1/2" Drain Fitting with Removable Basket Strainer and Rubber Stopper Spec Sheet (PDF)	

In keeping with our policy of continuing product improvement, Elkay reserves the right to change product specifications without notice. Please visit elkay.com for the most current version of Elkay product specification sheets. This specification describes an Elkay product with design, quality, and functional benefits to the user. When making a comparison of other producers' offerings, be certain these features are not overlooked. Latest version of the spec sheet available: https://www.elkayfiles.com/spec-sheets/ELGHU3322R_spec.pdf