ELKAY®

ECH8
Refrigeration Package

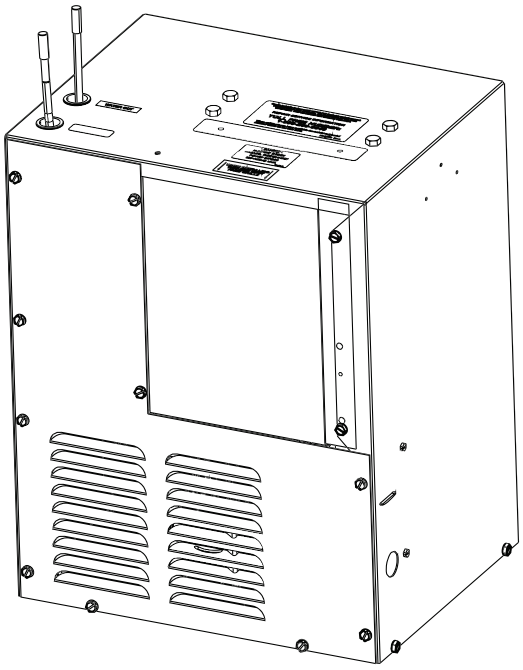

INSTALLATION, CARE AND USE MANUAL

Table of Contents

1. Safety 3
- 1.1 General 3
- 1.2 Safety Alert Symbol. 3
- 1.3 Definitions 3
- 1.4 Personal Safety. 3
- 1.5 Property Damage 5

2. General Information. 5
- 2.1 Installation / Use & Care 5
- 2.2 Disclaimer 5
- 2.3 Serial Number Location 5
- 2.4 Contact Information. 5
- 2.5 Notice of Changes 5
- 2.6 Warranty 5

3. Installation Preparation - Read Before Beginning Installation 7

4. Tools and Supplies 7
- 4.1 Tools Required 7
- 4.2 Installer-Supplied Parts. 7
- 4.3 Tools/Items required but not provided. 7

5. Ratings 7
- 5.1 ECH8 Series 7

6. Preparation 8
- 6.1 General Information 8

7. Installation: Electrical connection 8

8. Start-Up. 9

9. Service 9
- 9.1 Service: Adjustments 9
  - 9.1.1 Temperature Control 9
- 9.2 Service: Inspection/Cleaning 9
  - 9.2.1 Condenser Fan Motor 9
  - 9.2.2 Ventilation 9
  - 9.2.3 Waterflow 9
  - 9.2.4 Lubrication 9
  - 9.2.5 Actuation of Quick Connect Water Fittings 9

1. Safety

Think Safety

Before performing any work, read and understand the safety instructions in this manual.

1.1 General

Elkay Manufacturing Company (Elkay) cannot anticipate every possible circumstance that might involve a potential hazard during the installation of this product. The warnings and instructions in this Installation / Use & Care manual are, therefore, not all-inclusive. If a tool, installation procedure, or work method that is not specifically recommended by Elkay is used, you must be satisfied that it is safe for yourself and others. You should also make sure that the product will not be damaged by the methods you choose.

Most work-related accidents are caused by failure to observe basic safety rules or precautions. An accident can often be avoided by recognizing potentially hazardous situations before an accident occurs. As you install and maintain this product, you must be alert to potential hazards. You should also have the necessary training, skills, and tools to perform any installation or maintenance procedure.

1.2 Safety Alert Symbol

This is the safety alert symbol. It is used to alert you to potential personal injury hazards. Obey all safety messages that follow this symbol to avoid possible injury or death.

This manual contains WARNINGS, CAUTIONS, NOTICES, SAFETY INSTRUCTIONS, and NOTES which must be followed to prevent the possibility of improper service, damage to the equipment, personal injury, or death. The following key words call the reader's attention to potential hazards.

Hazards are identified by the "Safety Alert Symbol" and followed by a signal word such as "WARNING" or "CAUTION".

1.3 Definitions

DANGER The signal word that indicates a hazard with a high level of risk which, if not avoided, will result in death or serious injury.

WARNING The signal word that indicates a hazard with a medium level of risk which, if not avoided, could result in death or serious injury.

CAUTION The signal word that indicates a hazard with a low level of risk which, if not avoided, could result in minor or moderate injury.

NOTICE The signal word that indicates equipment or property damage can result if instructions are not followed.

Authorized Service Personnel – Factory trained personnel or personnel having working knowledge of electrical, plumbing and machine (appliance) maintenance procedures.

1.4 Personal Safety

DANGER

- **Please read these instructions completely before starting the installation or performing any service. Failure to follow the instructions and safety precautions in this manual can result in serious injury or death.**
- **Electric supply must be identical in voltage, cycle, and phase to that specified on nameplate.**
- **Electrical power supply must include ground-fault circuit interrupter (GFCI) protection.**
- **A means for disconnecting electrical supply to the unit must be incorporated in the fixed wiring in accordance with wiring rules. This is to allow electrical disconnection of the unit from electrical supply after installation. Failure to do so can result in severe injury to person or death**.

WARNING

Follow all instructions related to the installation of this product (unit).
For use with clean, clear potable drinking water only. Do not use with water that is microbiologically unsafe or of unknown quality without adequate disinfection before the system.
Installation and connection to water and electrical mains must be in compliance with local and national laws.

To avoid product or property damage, personal injury, or even possible death, carefully read, understand, and follow all the instructions in this Installation / Use & Care Manual before installing this product.

After installation, keep these instructions in a safe location for future reference.

Do not operate power tools unless you read and understand the instructions and warnings in this and all other applicable labels or manuals. Proper use of tools and the products described in this guide is your responsibility.

Lifting Hazard

- To avoid personal injury, always use these proper lifting techniques and use two people to move heavy cartons.
- Use appropriate lifting devices to move the load.
- Always use two people when lifting heavy or bulky cartons. DO NOT attempt to lift objects that are too heavy.

Power Tool Hazard

- To prevent personal injury or possible death, always follow the electrical safety recommendations of the power tool's manufacturer
- Do not use power tools in an unsafe manner
- Power tools should only be connected to a circuit protected by a ground-fault circuit interrupter (GFCI).
- If an extension cord is required, always use an OSHA approved extension cord.

Shock and Electrocution Hazards

Failure to follow these instructions could result in severe burns, significant injuries, and even death.

Water will conduct electric current to create a short circuit, resulting in injury or death.

- Never use electric power tools around water or wet floors/surfaces.
- Keep all liquids away from electrical cords and power tools.
- If an extension cord is required, always use an OSHA approved cord.
- DO NOT create a short circuit between a source of electricity and a liquid by being in contact with both simultaneously.

Contacting live electrical wiring with power tools or hand tools can cause serious injury or death.

Prior to any maintenance, make sure the unit is unplugged and circuit breakers are turned OFF.

Prior to installation, test for live circuits or wiring inside the wall before cutting or drilling into the wall.

Failure to follow these instructions could result in personal injuries, water damage, and other damage to floors, pipes, walls, and other portions of your building or home.

⚠ CAUTION

Follow all instructions related to installation and/ or maintenance of this product.

This appliance is not intended for use by persons with reduced physical, sensory, or mental capabilities or lack of experience and knowledge, unless they have been given supervision or instructions concerning use of the appliance by a person responsible for their safety. Children shall not play with the appliance. Cleaning and user maintenance shall not be made by children without supervision.

To prevent a metallic taste or increased metal content in the water due to an electrolysis process caused by electrical feedback from the grounding of electrical equipment to water mains, connect to the water mains using a dielectric coupling.

Personal Protection

Be sure to use all personal protective equipment, such as sturdy safety glasses, work shoes, hearing protection, and gloves, whenever necessary, to ensure your own safety.

To avoid eye injury, always wear protective glasses with side shields when using power tools. Also, make sure no one else can be injured by flying particles when using power tools.

To prevent possible damage to your hearing, always wear ear protection, such as earmuffs or earplugs, when using power tools.

Wear protective gloves during installation to protect against sharp edges from sheet metal components.

Tripping Hazard

Personal injury can result from tripping over power cords, tools, or other installation items. DO NOT leave items laying around the work area.

Cutting Hazard

The installation of this product may require using power tools.
Keep hands away from the cutting edge of any tool used in the installation of our product. Placing fingers in or around the cutting blades could result in serious personal injury.

Use Proper Tools
Always use proper tools which are in good working condition during the installation of the product. Using tools other than those listed could adversely affect the product and could result in property damage.

Failure to follow these instructions could result in personal injuries, water damage, and other damage to floors, pipes, walls, and other portions of your building or home.

1.5 Property Damage

Inspect Before Cutting
Make sure no electrical wiring or plumbing is present before cutting into a wall.

2. General Information

2.1 Installation / Use & Care

Read all instructions carefully before starting the installation and familiarize yourself with the various parts of this product.

Remote Water Chillers are designed to reduce the temperature of potable water that is routed through the water chiller. This chiller is meant to be installed in a properly ventilated, non-visible location.

This manual contains installation, Use & Care instructions for the ECH8 series Remote Chiller units. Followed carefully, these instructions will result in trouble-free installation of this Elkay Manufacturing Company (Elkay) product.

Any deviations, additions, and/or deletions from the described methods, without prior written approval of Elkay, will void the warranty covering this product.

Make sure the installation and use of this product meets all local, state, and federal plumbing and electrical codes.

Unit must be installed properly by trained service person.

2.2 Disclaimer

The information contained in this Installation / Use & Care Manual is given free of charge. It is based upon technical data which we believe to be reliable and is intended for use by persons having knowledge of this technical area at their own discretion and risk. Elkay assumes no responsibility for results obtained or damage incurred from the use of this material either in whole or in part by the buyer.

2.3 Serial Number Location

Please use the serial number located on the Remote Chiller unit when contacting us with questions concerning the installation of this product.

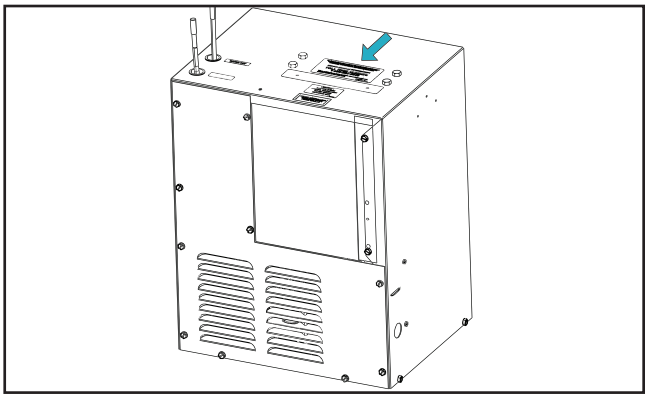

2.4 Contact Information

General Information
Elkay Manufacturing Company
1333 Butterfield Road, Suite 200
Downers Grove, IL 60515

Phone: 630.574.8484
Email: consumer@elkay.com
Website: http://www.elkay.com

USA/Canada Customer Care
Phone: 800.476.4106
Email: CustCare@Elkay.com

International Customer Care
Phone: 630.575.4755
Email: IntlCare@Elkay.com

Installation Services
Phone: 800.952.8064
Email: installservice@elkay.com
Website: http://www.elkay.com/contact-us/install

2.5 Notice of Changes

The information, specifications, and illustrations in this manual are based on the information that was available at the time this material was written and can change at any time. In keeping with our policy of continuing product improvement, Elkay reserves the right to change specification without notice.

All dimensions are given in inches (") and millimeters (mm).

2.6 Warranty

This product is covered by a Limited Warranty and Elkay will not be held responsible for damage of any kind in connection with the installation of the product.

Refer to the Elkay website http://www.elkay.com

WARNING **Electric shock hazard. Disconnect power before servicing unit.**

USES HFC-134A REFRIGERANT

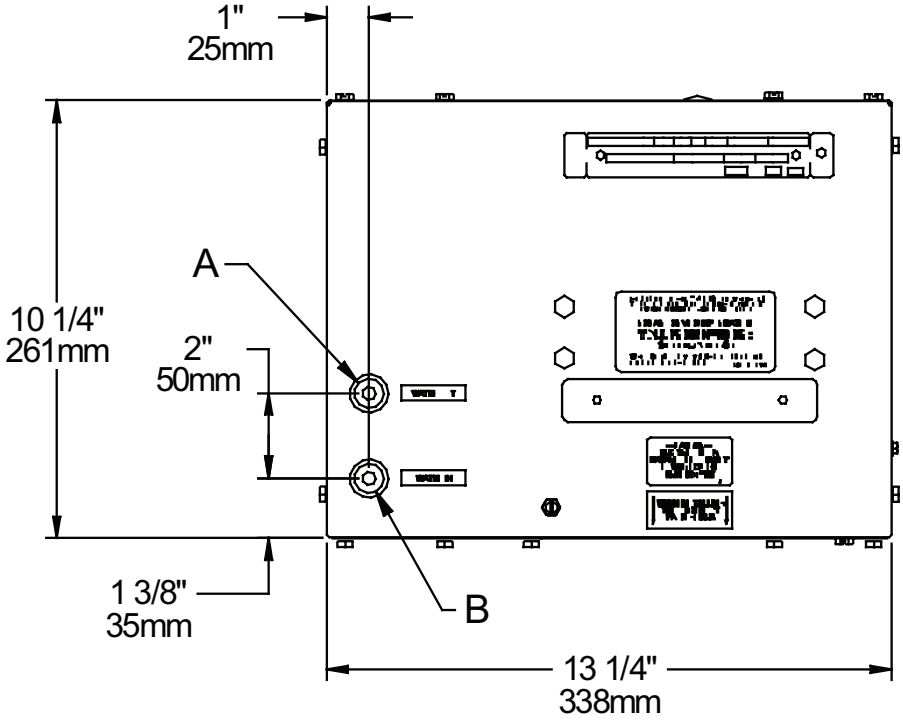

LEGEND
A = 1/4" O.D. TUBE WATER OUTLET
B = 1/4" O.D. TUBE WATER INLET
C = TEMPERATURE ADJUSTMENT
D = ELECTRICAL

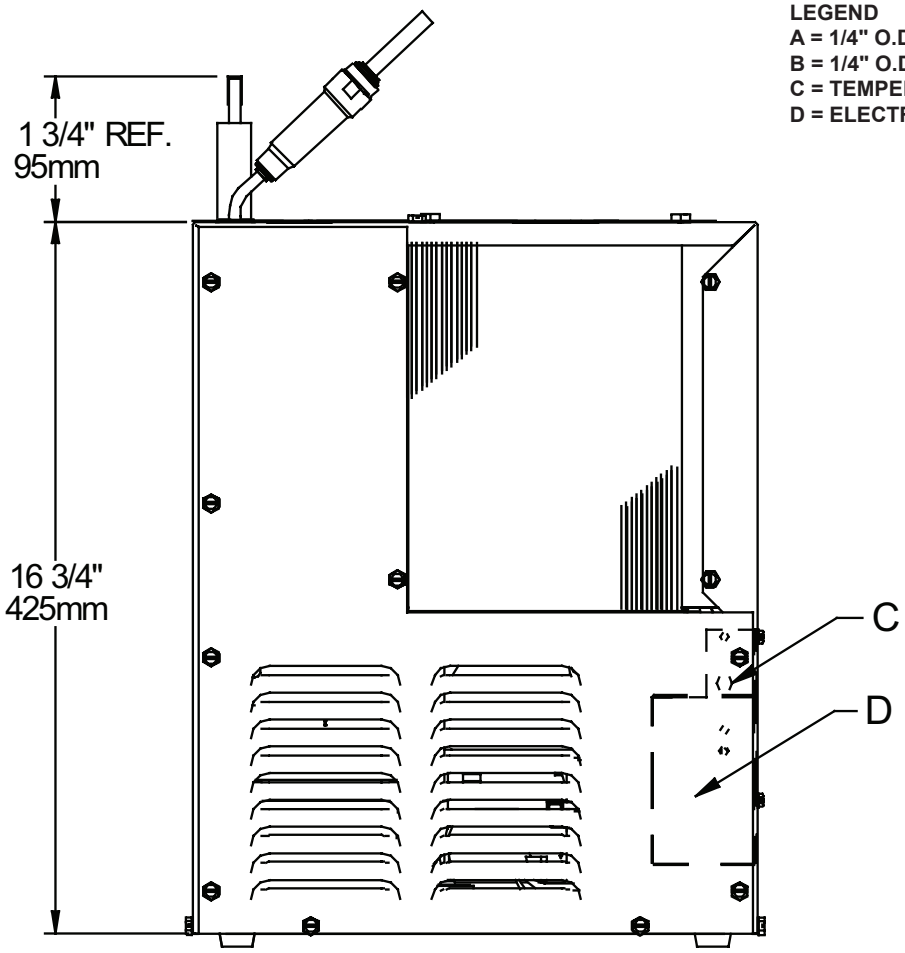

3. Installation Preparation - Read Before Beginning Installation

For correct and safe installation, please read these instructions completely.

The grounding of electrical equipment such as telephone, computers, etc., to water lines is a common procedure. This grounding may be in the building, or may occur away from the building. This grounding can cause electrical feedback into a water chiller, creating an electrolysis which causes a metallic taste or an increase in the metal content of the water. This condition is avoidable by using the proper materials. Drain fittings which are provided by the installer should be plastic to electrically isolate the chiller from the building plumbing system.

NOTICE **Warranty is void if installation is not made in accordance with current instructions.**

- Hose sets are not to be used for connecting to water mains.
- Always shut off the valve at the installation/ service area to reduce risk of water damage.
- Thoroughly flush all water lines and fittings of all foreign matter before connecting to chiller.
- If inlet pressure is above 100 psig (0.69 MPa), a pressure regulator must be installed in water supply line. Any damage caused by the water pressure outside its rated pressure is not covered by warranty.

4. Tools and Supplies

4.1 Tools Required

Tool	Used For
Phillips Screwdriver	Remove electrical box cover
Various Electrician's Hand Tools	Connecting power source to the unit's wiring
Various Plumber's Hand Tools	Connecting unit's plumbing to the household water source and waste drain
3/32 Allen Wrench	Remove the front covers

4.2 Installer-Supplied Parts

Description	Qty.
1/4" (6.4mm) Socket Wrench or Flat Head Screwdriver	1
Water Shut-off Valve	1
Additional fasteners	—

4.3 Tools/Items required but not provided

Description	Qty.
Safety glasses	1
Protective gloves	1
Hex driver	1

5. Ratings

5.1 ECH8 Series

Description	ECH8	
Electrical	115VAC, 60Hz, (See nameplate for Amperage), 1 phase	220VAC, 50/60Hz, (See nameplate for Amperage), 1 phase
Ambient Air Temp.	50-90 °F (10-32 °C)	
Water Pressure	20-100 psig (0.14-0.69 MPa)	
Maximum Water Temp.	90 °F (32 °C)	
Refrigerant	HFC-R134a	
Ingress Protection	IP20	
Use	For Indoor Commercial Use only	

6. Preparation

6.1 General Information

1. This Remote Chiller is designed for indoor use only and should not be installed outdoors or in a humid environment.
2. Use care when opening and removing the packaging to prevent damage to the product.
   a. Inspect the product for any shipping damage and report it immediately to the location of purchase. Installation of a damaged product will void the warranty.
   b. Confirm that all parts have been included for the proper installation of this product. Contact the location of purchase if damaged parts are found.

NOTICE **Make sure no electrical wiring, potable water inlet pipes, or drain water outlet pipes will be damaged during installation of the product. Damage to any of these items can cause electrical damage, fire, and/or water damage.**

3. Shut off the water supply source and disconnect power to the electrical outlet being used to operate the product before starting installation.

NOTICE **Mounting hardware to be supplied by customer.**

4. It is important to ensure proper ventilation.
5. When mounting in an open area, to ensure proper ventilation, maintain a 4" (102mm) clearance from cabinet louvers on each side of chiller. When mounting unit in a cavity or behind a wall, maintain a minimum space of 4" (102mm) on each side, 4" (102mm) on the top and a depth of 12" (305mm).
6. Water inlet is 3/8” (10 mm) O.D. unplated tube. Contractor to supply connections as required.
7. Connecting lines to be made of unplated copper. Thoroughly flush all lines to remove all foreign matter before connecting to chiller. If flushing does not remove all particles, a water strainer should be installed in supply line. This chiller is manufactured in such a manner that it does not in any way cause taste, odor, color or sediment problems.
8. Connect chiller to building supply with a shut-off valve and install the in-line strainer between the valve and chiller.
9. Electrical: Make sure power supply is identical in voltage, cycle, and phase to that specified on chiller serial plate. Never wire the compressor directly to the power supply.

7. Installation: Electrical connection

1. Turn off electrical supply to chiller circuit.
2. Remove the front panel to gain access to electrical box using a 5/16" (7.9mm) socket wrench or a flathead screwdriver.

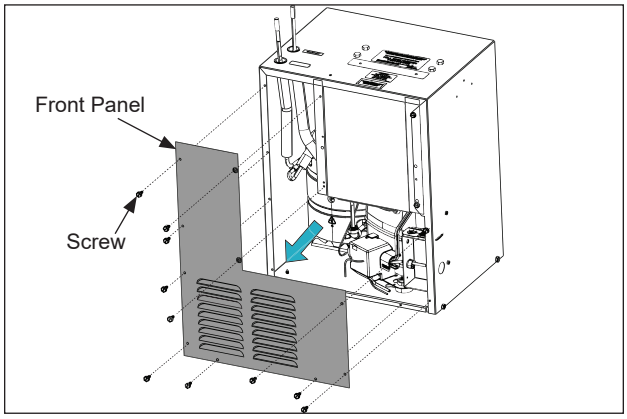

3. Rotate the fan to ensure a proper clearance and free fan action.
4. Use 3/8” cable clamp connector or appropriate conduit connector with nut to connect the electrical wire to the unit.

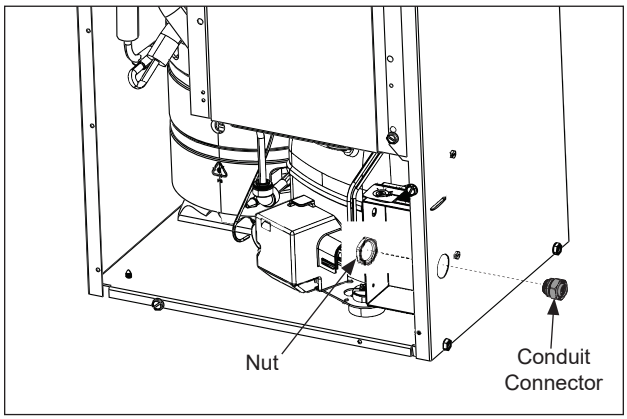

5. Connect ground wire (A) to ground screw (provided).

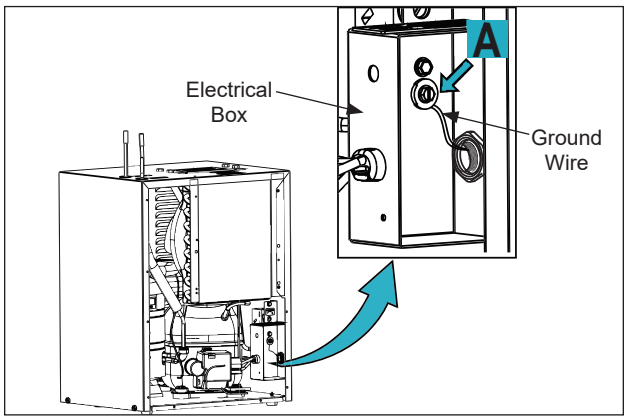

Note: Danger! Electric shock hazard. Disconnect power before servicing unit.

6. Connect the black wire (B) to hot line and connect the white wire (C) to neutral line.

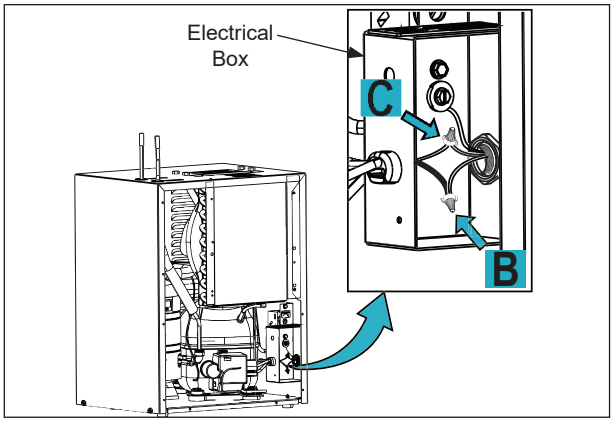

7. Install the front panel to the unit.

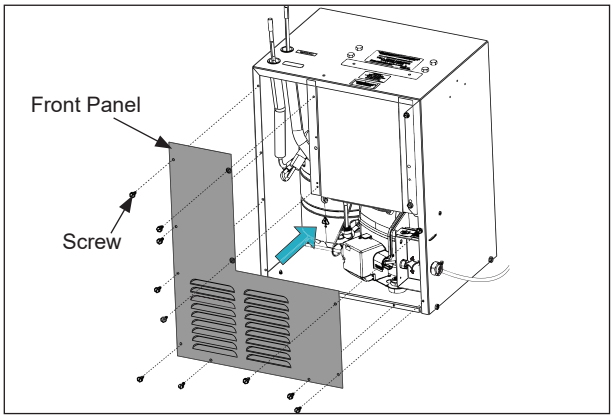

8. Start-Up.

1. Open water shut-off valve.
2. Purge air from all water lines by operating bubbler valve of fountain to which chiller is connected. Steady water stream assures all air is removed.
3. Check all water connections for leaks. Fix all leaks before proceeding.
4. Turn on electrical supply.

9. Service

For proper and safe servicing, please read these Caution, Warning instructions completely before servicing.

Note: *Disconnect power supply before servicing the unit.*
All service work must be performed by an authorized service person.

9.1 Service: Adjustments

9.1.1 Temperature Control

Factory set for 50ºF ± 5º (10ºC ± 5º) water under normal conditions. To adjust water temperature, turn off electrical supply, remove front panel using a 5/16" (7.9mm) socket wrench or flat head screwdriver, and turn the screw (item no. 9) on cold control clockwise for colder, counter clockwise for warmer.

9.2 Service: Inspection/Cleaning

- Inspect the Water Chiller twice each year for proper operation and performance.
- Inspection of the unit will require disconnecting electrical supply, removal of panels, etc. and reassembly and return to service practices.

9.2.1 Condenser Fan Motor

Visually check and confirm the condenser fan turns freely. If the condenser fan does not spin freely, have an authorized service personnel to check and replace the fan.

9.2.2 Ventilation

Cabinet louvers and the condenser fins should be periodically cleaned with a brush, air hose or vacuum cleaner. Cleaning should be done twice each year or more frequently if needed due to environment. Excess dirt or poor ventilation can cause no cold water and compressor cycling on the compressor overload protector.

9.2.3 Waterflow

Make sure that the water flow is proper. If water flow is slow, then inspect the filter or in-line strainer for restriction. Replace the filter cartridge if required. Disassemble the in-line strainer and clean if required.

9.2.4 Lubrication

Motors should be lifetime lubricated.

9.2.5 Actuation of Quick Connect Water Fittings

Chiller is provided with lead-free plug which utilizes an O-ring seal. To remove the plug from Chiller, relieve the water pressure, pull the collar towards the fitting and then pull the fitting from the tube. To install the plug, push the fitting straight onto the tubing until it reaches a positive stop, which should be approximately 3/4” (19mm). Refer page 10 for quick connect fittings.

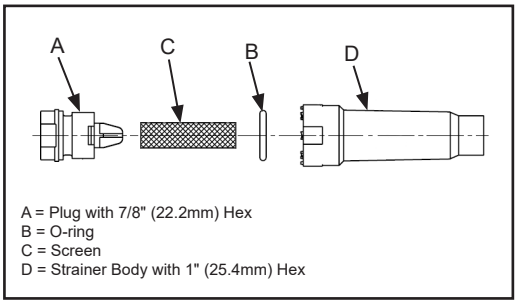

Fig. 1

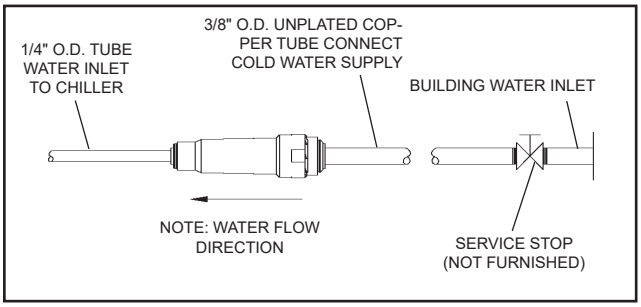

Fig. 2

Operation of Quick Connect Fittings

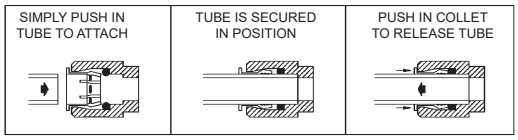

Fig. 3

PUSHING TUBE IN BEFORE PULLING IT OUT HELPS TO RELEASE TUBE

Wiring Diagram

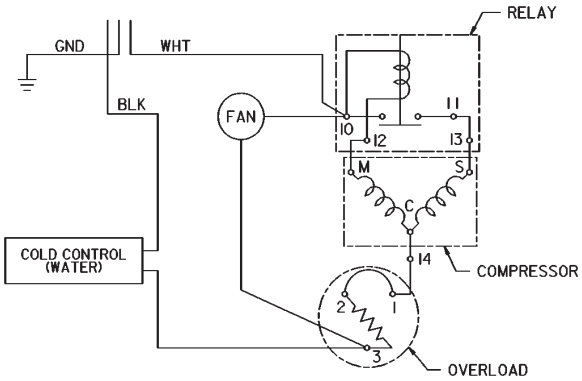

Fig. 4

REPLACEMENT PARTS LIST

115V/220V-50/60Hz		
ITEM NO.	PART NO.	DESCRIPTION
1	98724C	Kit - Evap Replace Assy
2	28478C	Cabinet
3	98776C	Kit - Condenser/Drier
5	20282C	Bracket - Fan Mounting
6	98778C	Kit - Heat Exchanger/Drier
7	66703C	Drier
9	98773C	Kit - Cold Control/Screws
10	28477C	Panel - Front
12	98777C	Kit - Compressor Mtg Hdwe
13	50930C	Bumper
14	27303C	Baseplate
15	22300C	Panel - Rear
16	55996C	In-line Strainer
17	56237C	Fan Shroud

115V

ITEM NO.	PART NO.	DESCRIPTION
4	98775C	Kit - Fan Mtr/Blade/Nut/Shroud
*8	36322C	Compressor Service Pak
11	0000000238	Kit - Elect/Relay/Cover/OL

220V - 50/60HZ

ITEM NO.	PART NO.	DESCRIPTION
4	0000000244	Kit - Fan Mtr/Blade/Nut/ Shroud (50 HZ)
	0000000245	Kit - Fan Mtr/Blade/Nut/ w/o Shrd (60 HZ)
*8	1000002147	Comp. Service Pak (50 HZ)
	1000002146	Comp. Service Pak (60 HZ)
11	98751C	Kit - Elect/Relay/Cover/OL (50 HZ)
	98752C	Kit - Elect/Relay/Cover/OL (60 HZ)

***INCLUDES RELAY & OVERLOAD. IF UNDER WARRANTY, REPLACE WITH SAME COMPRESSOR USED IN ORIGINAL ASSEMBLY.**

NOTE: *All correspondence pertaining to any of the above water chiller or orders for repair parts MUST include model number and serial number of chiller, name and part number of replacement part.*

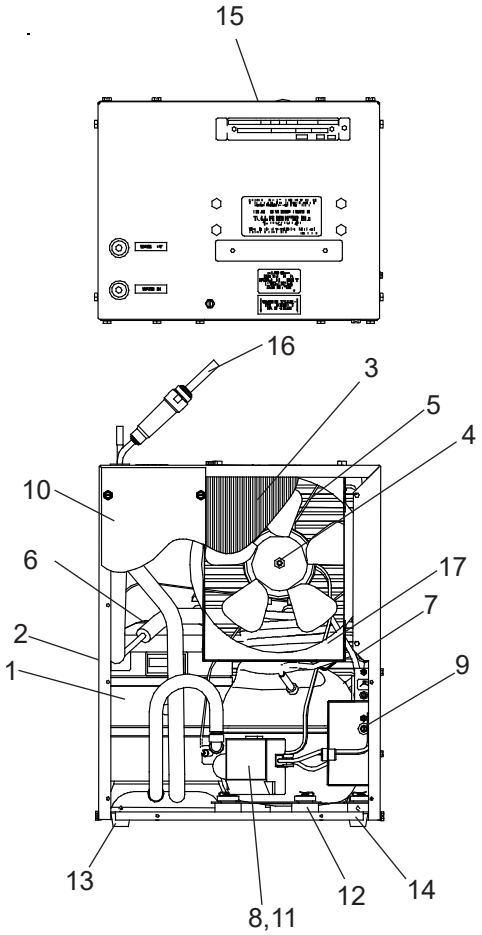

Fig. 5

2000000694

Patent zurnelkay.com/patents

PRINTED IN U.S.A.

FOR PARTS, CONTACT YOUR LOCAL DISTRIBUTOR OR CALL 1.800.834.4816
REPAIR SERVICE INFORMATION TOLL FREE NUMBER 1.800.260.6640

ELKAY MANUFACTURING CO. • 1333 BUTTERFIELD ROAD SUITE 200 • DOWNERS GROVE • IL 60515 • USA 630.574.8484 • www.elkay.com